INDEXED DM/DM
FOLLOW UP KM
PROOFED
SCANNED DM

Instrument #: 2016-1587
07/28/2016 11:11:06 AM Total Pages: 1
PLC PLAT CORNER CER
Recording Fee: $0.00 Transfer Tax: $0
Denise Meeves, Recorder, Crawford County Iowa

PREPARED BY: PAUL ASSMAN-CRAWFORD COUNTY ENGINEER'S OFFICE-COURTHOUSE-DENISON, IA.-712-263-2449

UNITED STATES PUBLIC LAND SURVEY CORNER CERTIFICATE OF

LAND SURVEY MONUMENT SITUATED IN MORGAN TOWNSHIP, THE NORTH 1/4 CORNER OF SECTION 23, T-85N, R-40W OF THE FIFTH P.M. CRAWFORD COUNTY, IOWA.

PREVIOUSLY RECORDED AS **NO.**97-2681

MONUMENT DESCRIPTION AND REMARKS

NORTH 1/4 CORNER SEC. 23-85-40

FOUND BOLT FLUSH WITH SURFACE AS SET PER PREVIOUS TIES. COMPLETED HMA OVERLAY. SET CARRIAGE BOLT 0.05' DEEP AND RETIED CORNER.

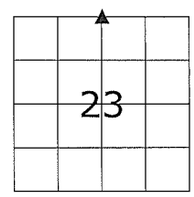

NORTH 1/4 CORNER SEC. 23-85-40

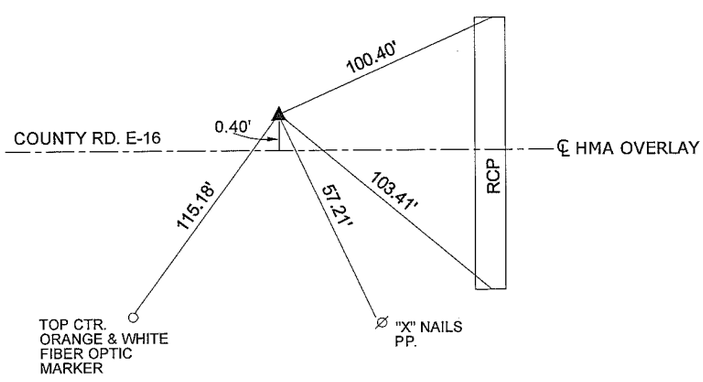

ALL DISTANCES ARE PLUMB CHAINED

CERTIFICATION:

I HEREBY CERTIFY THAT THIS LAND SURVEYING DOCUMENT WAS PREPARED AND THE RELATED SURVEY WORK WAS PERFORMED BY ME OR UNDER MY DIRECT PERSONAL SUPERVISION AND THAT I AM A DULY LICENSED LAND SURVEYOR UNDER THE LAWS OF THE STATE OF IOWA.

Signature — Date of Survey: 7/27/16

PAUL J. ASSMAN — Typed Name
11982 — L.S. No.
12-31-16 — License Renewal Date

Pages covered by this seal 1

LICENSED PROFESSIONAL LAND SURVEYOR
PAUL J. ASSMAN
11982
IOWA